YANMAR

PARTS CATALOG

0CW10-M64400EN

Last update Apr., 2019

PREFACE

1. This parts catalog is the 1st edition of 3TNM68-GHFCG for HIMOINSA CHINA.

Pub.No. : 0CW10-G64400
Published : June, 2010

2. Model name

Engine model	Vehicle	Vehicle made by
3TNM68-GHFCG	GENERATOR	HIMOINSA CHINA

Directions for the Parts Catalog.

1.The parts stipulated in this Parts Catalog are not necessarily standard equipped parts.
2.Parts may change without prior notice.
3.The following is an example of the Parts Catalog format.

0CF10-G21601 29. FUEL INJECTION PUMP(W/BOOST)

(A)=4JH-DT
(B)=4JH-DTZ
(C)=4JH-DTZP
(D)=4JH-DTZA
(E)=4JH-DTZY
(F)=

① REF.	② LEV.	PARTS NO.	DESCRIPTION	Q'TY (A)	(B)	(C)	(D)	(E)	(F)	③ I	⑤ R
1	1	729595-51390	FUEL INJECTION PUMP	1	1	1	1	1			1
1-1	1	729595-51391	FUEL INJECTION PUMP	1	1	1	1	1		N	1
	(A=E00185)	(B=E00200)									
3	2	26022-060162	SCREW M 6X 16	9	9	9	9	9			
3-1 ④	2	26022-060162	SCREW M 6X 16	4	4	4	4	4		K	
	(A=E00156)	(B=E00156)	(C=E00156) (D=E00156)	(E=E00156)							
4	2	129470-51040	CAMSHAFT	1	1	1	1	1			
5	2	122710-51050	BEARING, ROLLER	2	2	2	2	2			
6	2	129470-51060	RETAINER	1	1	1	1	1			

Remarks
(1) BOOST COMPEMSATOR TYPE. OPTIONAL PART, TO E00155,(4JH-DT, 4JH-DTZ

① Ref. No.

The Ref. No. listed may not be in accordance with the illustration Ref. No.

(Ex.) Illustration No. 1 — List Ref No. 1 (Before change) → 1- 1 (After change)

For interchangeable symbols N, R and K, illustrations for new parts may be abbreviated.

② Lev. (Level)

Level indication
The numbers below indicate the level of relativity towards the main part.
1 ----- Main parts (Assembly parts)
2 ----- Sub component included in " 1 ".
3 ----- Sub component included in " 2 ".
Note) Parts that are not for sale are partially illustrated but not listed.

③ Interchangeability Mark

When a part change takes place, one of the following interchangeability symbols is indicated beside the part.

Symbol	Interchangeability	Contents note
N	Old ← Yes / No → New	New Part is interchangeable for Old Part but Old Part is not interchangeable for New Part.
Q	Old ← No / Yes → New	New Part is not interchangeable for Old Part but Old Part is interchangeable for New Part.
R	Old ← Yes / Yes → New	New/ Old Parts are both interchangeable.
S	Old ← No / No → New	New/ Old Parts are both not interchangeable.
W		Part newly added.
Z		Part discontinued.
F		Not interchangeable by a single part but interchangeable together with related parts.
K		Changes only for used parts quantities.

④ Effective Machine No.

When a part changes, the effective Machine No. will be indicated in the (A)-(F) column.

Product Symbol	Product No.	Product Symbol	Product No.
C	Clutch No. Compressor No.	F	Machine No. (Agricultural Equip.)
D	Drive No.	M	Machine No.
E	Engine No.		

Note 1) A date may follow the symbol. (Ex.) 1996.01
Note 2) " XXXXX " and " ZZZZZ " are for parts that could not be predicted or for engine models that could not be identified.
Note 3) (A=E00185) is the E (Engine Serial Number) for the column (A) model (in this case 4JH-DT) after the parts design change.

⑤ Remarks Mark

Figures or alphabets (symbols) are entered in the remarks column.
The comments (remarks) on parts that are indicated at the bottom of the illustration are the same symbols as those stated above.

Contents

0CW10-M64400

Fig. No.	Fig. Name
3TNM68-GHFCG	
1.	CYLINDER BLOCK
2.	GEAR HOUSING
3.	FLYWHEEL HOUSING & OIL SUMP
4.	CYLINDER HEAD & BONNET
5.	AIR CLEANER
6.	EXHAUST MANIFOLD
7.	CAMSHAFT & DRIVING GEAR
8.	CRANKSHAFT & PISTON
9.	LUB.OIL SYSTEM
10.	COOLING WATER SYSTEM
11.	FUEL INJECTION PUMP
12.	GOVERNOR
13.	FUEL INJECTION VALVE
14.	FUEL LINE
15.	STARTING MOTOR
16.	GENERATOR
18.	(16A)GENERATOR
17.	GASKET SET

Fig.1. CYLINDER BLOCK

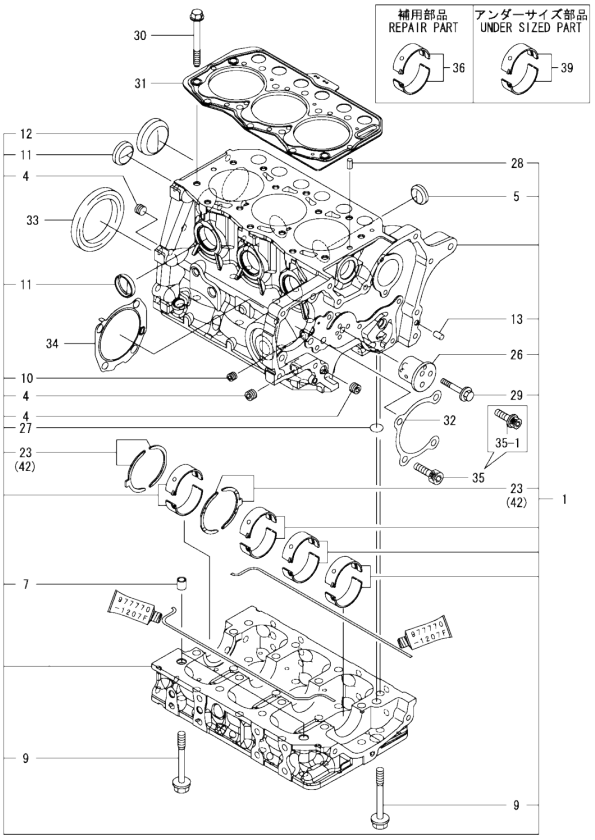

(A)=3TNM68-GHFCG
(B)=
(C)=
(D)=
(E)=
(F)=

No.	Lev.	Parts No.	Description	Q'ty (A)	(B)	(C)	(D)	(E)	(F)	I	R
1	1	119127-01560	BLOCK ASSY, CYLINDER	1							
4	2	124060-01050	PLUG, PT1/8	3							
5	2	119125-01970	PLUG, 25	3							
7	2	119125-01960	PIPE, KNOCK	2							
9	2	119125-02061	BOLT, METAL CAP	16							
10	2	23876-005000	PLUG, R005	1							
11	2	27241-300000	PLUG 30	4							
12	2	27241-450000	PLUG, 45	1							
13	2	119620-01620	PIN, M6X10	2							
23	2	119125-02930	BEARING, THRUST	2							
26	2	119125-25050	SHAFT, IDLE GEAR	1							
27	2	129900-32040	O-RING, P14	1							
28	2	22351-060012	PIN, SPRING 6.0X12	2							
29	2	26106-060402	BOLT, M6X 40 PLATED	3							
30	1	119266-01200	BOLT, HEAD	14							
31	1	119125-01330	GASKET, HEAD	1							
32	1	119125-01790	GASKET	1							
33	1	119734-02220	SEAL, OIL	1							
34	1	119125-51800	GASKET	1							
35	1	26450-080252	BOLT, M8X 25	4							
35-1	1	119125-01800	BOLT	4						N	
	(A=EZZZZZ)										
36	1	119125-02900	BEARING, MAIN	4							1
39	1	119125-02910	BEARING, 0.25 US	4							2
42	1	119125-02940	BEARING, THRUST 0.25	2							3

Remarks
(1)Repair part.
(2)Under-sized(U.S.=0.25)part.
(3)Over-sized(O.S.=0.25)part.

N:Old ←Yes/No→ New. Q:Old ←No/Yes→ New. R:Old ←Yes/Yes→ New. S:Old ←No/No→ New. W:Add. Z:Discontinued. F:Interchangeable by set. K:Q'ty Change

Copyright (C) YANMAR CO., LTD. All RightsReserved.

0CW10-M64400 3TNM68-GHFCG

Fig.2. GEAR HOUSING

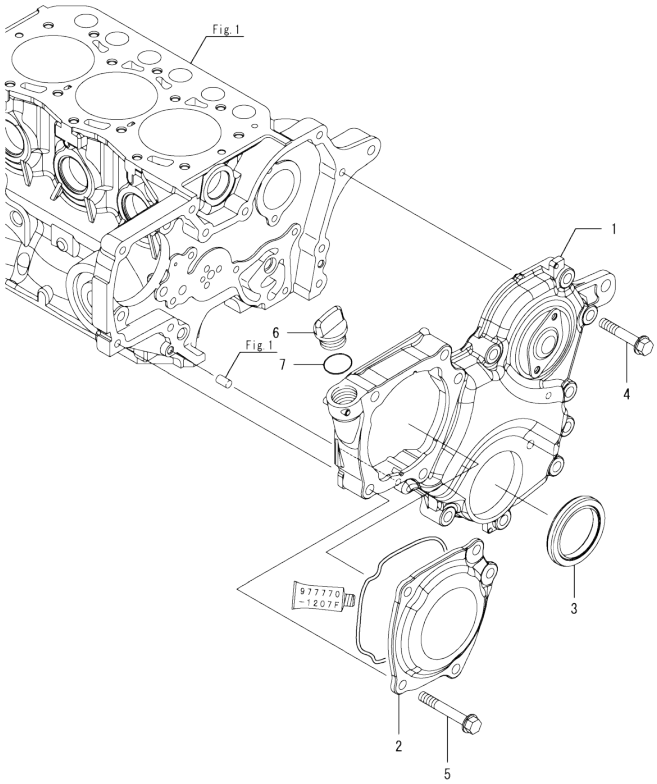

0CW10-M64400 Fig.2

(A)=3TNM68-GHFCG (D)=
(B)= (E)=
(C)= (F)=

No.	Lev.	Parts No.	Description	Q'ty (A)	(B)	(C)	(D)	(E)	(F)	I	R
1	1	119125-01500	COVER, GEAR CASE	1							
2	1	119125-01750	COVER	1							
3	1	119717-01800	SEAL, OIL	1							
4	1	26106-080352	BOLT, M8X 35 PLATED	8							
5	1	26106-080452	BOLT, M8X 45 PLATED	5							
6	1	106760-01770	CAP	1							
7	1	24311-000180	O-RING, 1AP18.0	1							

N:Old ←Yes/No→ New. Q:Old ←No/Yes→ New. R:Old ←Yes/Yes→ New. S:Old ←No/No→ New. W:Add. Z:Discontinued. F:Interchangeable by set. K:Q'ty Change

Copyright (C) YANMAR CO., LTD. All RightsReserved.

Fig.3. FLYWHEEL HOUSING & OIL SUMP

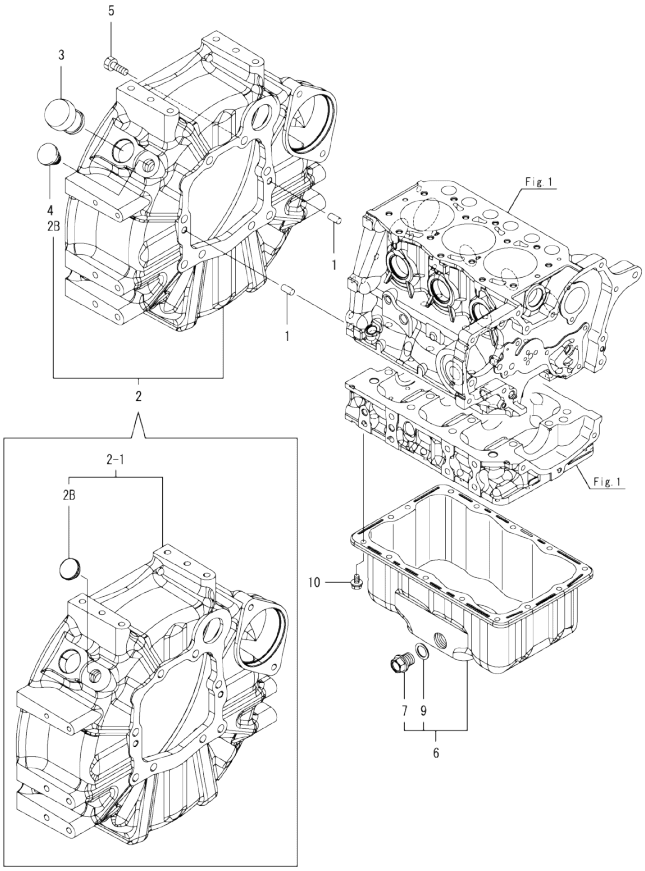

Remarks
(1)Fig.8 No.8-1 & Fig.15 No.1-1 interchangeable by set.

(A)=3TNM68-GHFCG (D)=
(B)= (E)=
(C)= (F)=

No.	Lev.	Parts No.	Description	Q'ty (A)	(B)	(C)	(D)	(E)	(F)	I	R
1	1	129100-01580	PIN, PARALLEL 8X16	2							
2	1	119128-01670	HOUSING ASSY, WHEEL	1							
2-1	1	119D00-01610	HOUSING ASSY, WHEEL	1						F	1
2B	(A=E047983) 2 (A=*2013.05.)	119888-01850	PLUG, RUBBER 19	1						W	
3	1	119620-01750	CAP, WHEEL COVER	1							
4	1 (A=*2013.05.)	119888-01850	PLUG, RUBBER 19	1						Z	
5	1	26206-100252	BOLT, M10X 25 PLATED	8							
6	1	119125-01770	OIL PAN ASSY	1							
7	2	105425-01690	PLUG, DRAIN M16	1							
9	2	22190-160002	WASHER, SEAL 16	1							
10	1	119125-01780	BOLT, TORX M6X10	14							

N:Old ←Yes/No→ New. Q:Old ←No/Yes→ New. R:Old ←Yes/Yes→ New. S:Old ←No/No→ New. W:Add. Z:Discontinued. F:Interchangeable by set. K:Q'ty Change

Copyright (C) YANMAR CO., LTD. All RightsReserved.

Fig.4. CYLINDER HEAD & BONNET

(A)=3TNM68-GHFCG
(B)=
(C)=
(D)=
(E)=
(F)=

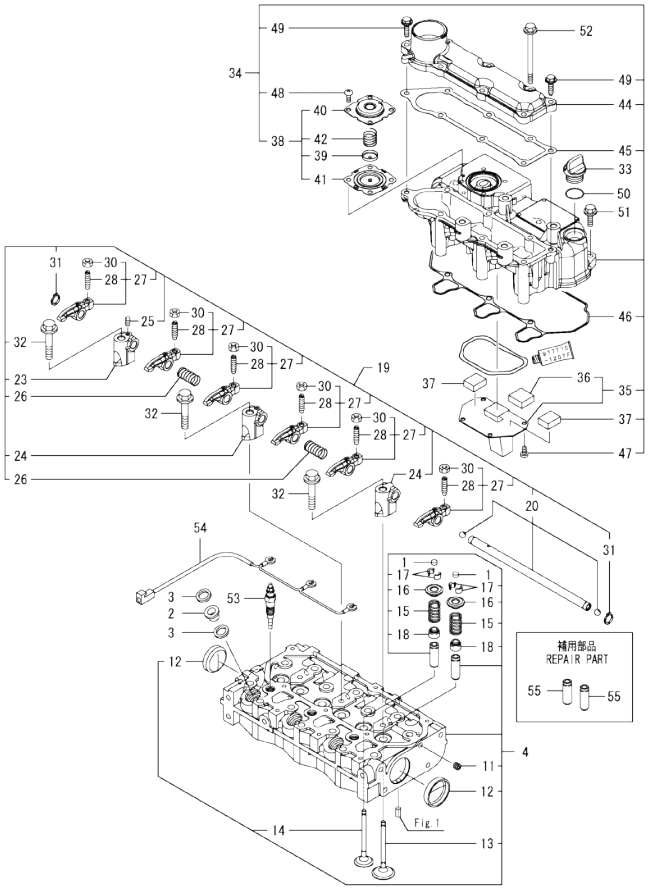

No.	Lev.	Parts No.	Description	Q'ty (A)	(B)	(C)	(D)	(E)	(F)	I	R
1	1	119260-11370	CAP, VALVE	6							
2	1	129901-11450	PROTECTOR, NOZZLE	3							
3	1	119600-11460	GASKET, NOZZLE	6							
4	1	119125-11740	HEAD ASSY, CYLINDER	1							
11	2	23876-005000	PLUG, R005	1							
12	2	27241-350000	PLUG, 35	2							
13	2	119125-11100	VALVE, INTAKE	3							
14	2	119125-11110	VALVE, EXHAUST	3							
15	2	119125-11130	SPRING, VALVE	6							
16	2	119125-11180	RETAINER, SPRING	6							
17	2	119125-11190	COTTER	12							
18	2	119125-11340	SEAL, VALVE STEM	6							
19	1	119125-11200	SUPPORT ASSY, ARM	1							
20	2	119125-11240	SHAFT ASSY, ROCKER	1							
23	2	119125-11260	SUPPORT, ROCKER ARM	1							
24	2	119125-11270	SUPPORT, ROCKER ARM	2							
25	2	119260-11270	SCREW	1							
26	2	119260-11280	SPRING	2							
27	2	119125-11650	ARM, ROCKER	6							
28	3	105010-11230	SCREW, VALVE ADJUST	6							
30	3	26856-060002	NUT, M6	6							
31	2	22242-000100	RING, 10	2							
32	1	26106-080452	BOLT, M8X 45 PLATED	3							
33	1	106760-01770	CAP	1							
34	1	119125-11380	BONNET ASSY, HEAD	1							
35	2	119717-03031	PLATE	1							
36	3	119717-03070	BAFFLE, BREATHER	1							
37	2	119717-03070	BAFFLE, BREATHER	2							
38	2	119802-03100	DIAPHRAGM ASSY	1							
39	3	119802-03110	PLATE	1							
40	3	119802-03121	COVER, DIAPHRAGM	1							
41	3	119802-03131	DIAPHRAGM	1							
42	3	119802-03141	SPRING, DIAPHRAGM	1							
44	2	119125-11320	COVER, BONNET	1							
45	2	119125-11330	GASKET	1							
46	2	119125-11370	GASKET, BONNET	1							
47	2	22857-500100	SCREW, 5X10	4							
48	2	22857-500100	SCREW, 5X10	4							
49	2	26476-060202	SCREW, TAPPING M6X20	2							
50	1	24311-000180	O-RING, 1AP18.0	1							
51	1	26106-060202	BOLT, M6X 20 PLATED	3							
52	1	26106-060802	BOLT, M6X 80 PLATED	6							
53	1	119125-77800	PLUG, GLOW	3							
54	1	119125-77820	CONNECTOR, GLOW PLUG	1							
55	1	119125-11800	GUIDE, VALVE	6							1

Remarks
(1)Repair part.

N:Old ←Yes/No→ New. Q:Old ←No/Yes→ New. R:Old ←Yes/Yes→ New. S:Old ←No/No→ New. W:Add. Z:Discontinued. F:Interchangeable by set. K:Q'ty Change

Copyright (C) YANMAR CO., LTD. All RightsReserved.

Fig.5. AIR CLEANER

(A)=3TNM68-GHFCG
(B)=
(C)=
(D)=
(E)=
(F)=

No.	Lev.	Parts No.	Description	Q'ty (A)	(B)	(C)	(D)	(E)	(F)	I	R
1	1	119128-12520	CLEANER ASSY, AIR	1							
2	2	119808-12540	VALVE, UNLOADER	1							
3	2	119655-12560	ELEMENT	1							
4	2	119686-12570	COVER ASSY	1							
5	2	105027-12580	RING	1							
6	2	129612-12650	LABEL, MARKING	1							
7	2	126650-12680	INDICATOR	1							
8	2	119233-12700	ELEMENT	1							
9	1	119128-12570	BRACKET, AIR CLEANER	1							
10	1	119128-12640	PIPE, AIR INTAKE	1							
11	1	23000-054000	CLAMP, 54	2							

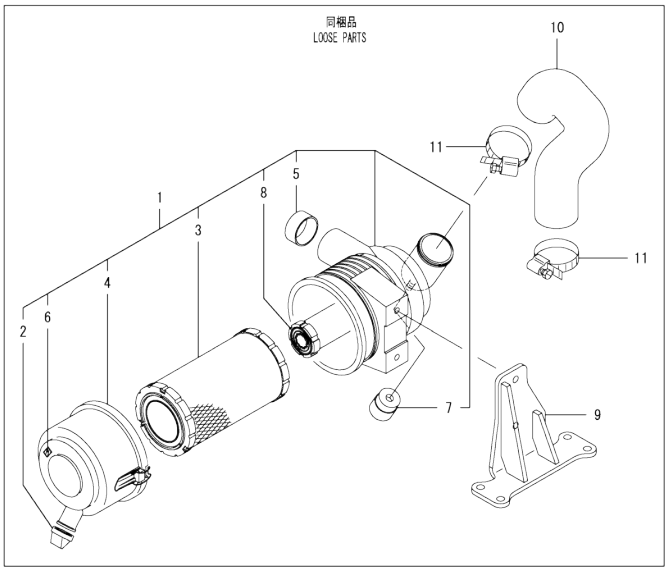

N:Old ←Yes/No→ New. Q:Old ←No/Yes→ New. R:Old ←Yes/Yes→ New. S:Old ←No/No→ New. W:Add. Z:Discontinued. F:Interchangeable by set. K:Q'ty Change

Copyright (C) YANMAR CO., LTD. All RightsReserved.

0CW10-M64400 3TNM68-GHFCG

Fig.6. EXHAUST MANIFOLD

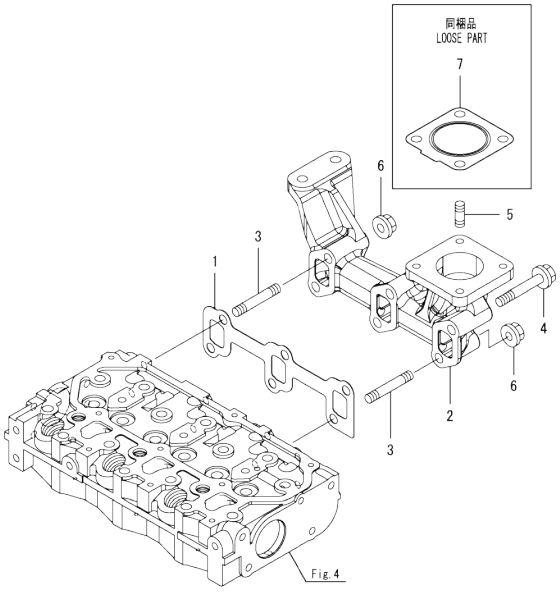

0CW10-M64400 Fig.6

(A)=3TNM68-GHFCG (D)=
(B)= (E)=
(C)= (F)=

No.	Lev.	Parts No.	Description	Q'ty (A)	(B)	(C)	(D)	(E)	(F)	I	R
1	1	119125-13110	GASKET	1							
2	1	119125-13140	MANIFOLD, EXHAUST	1							
3	1	119717-13600	STUD, M8X50	2							
4	1	119802-13620	BOLT, M8X50	4							
5	1	119131-18320	STUD, M8X22	4							
6	1	26306-080002	NUT, M8	2							
7	1	119515-13200	GASKET, SILENCER	1							

N:Old ←Yes/No→ New. Q:Old ←No/Yes→ New. R:Old ←Yes/Yes→ New. S:Old ←No/No→ New. W:Add. Z:Discontinued. F:Interchangeable by set. K:Q'ty Change

Copyright (C) YANMAR CO., LTD. All RightsReserved.

Fig.7. CAMSHAFT & DRIVING GEAR

(A)=3TNM68-GHFCG
(B)=
(C)=
(D)=
(E)=
(F)=

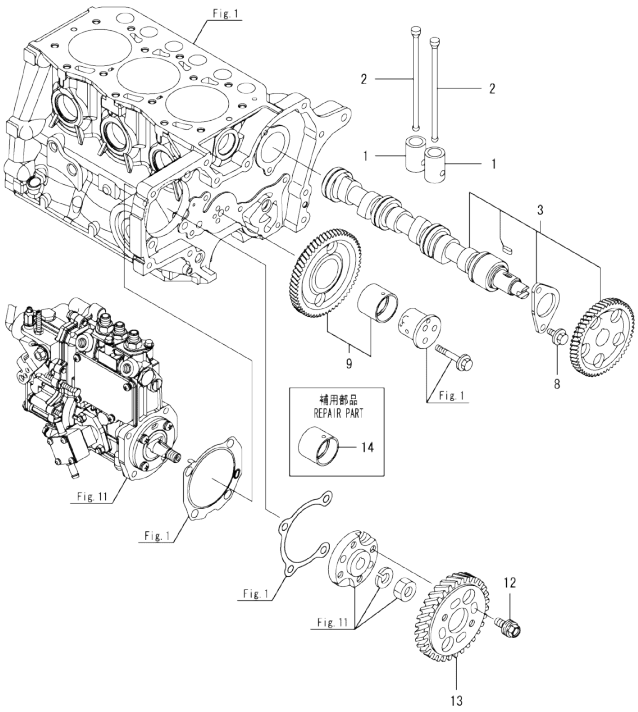

No.	Lev.	Parts No.	Description	Q'ty (A)	(B)	(C)	(D)	(E)	(F)	I	R
1	1	119260-14200	TAPPET	6							
2	1	119260-14400	ROD, PUSH	6							
3	1	119125-14580	CAMSHAFT ASSY	1							
8	1	26106-060122	BOLT, M6X 12 PLATED	2							
9	1	119125-25100	GEAR ASSY, IDLE	1							
12	1	129150-25301	BOLT	4							
13	1	119125-25930	GEAR, PUMP	1							
14	1	119125-25910	BUSH, IDLE GEAR	1							1

Remarks
(1)Repair part.

N:Old ←Yes/No→ New. Q:Old ←No/Yes→ New. R:Old ←Yes/Yes→ New. S:Old ←No/No→ New. W:Add. Z:Discontinued. F:Interchangeable by set. K:Q'ty Change

Copyright (C) YANMAR CO., LTD. All RightsReserved.

Fig.8. CRANKSHAFT & PISTON

(A)=3TNM68-GHFCG
(B)=
(C)=
(D)=
(E)=
(F)=

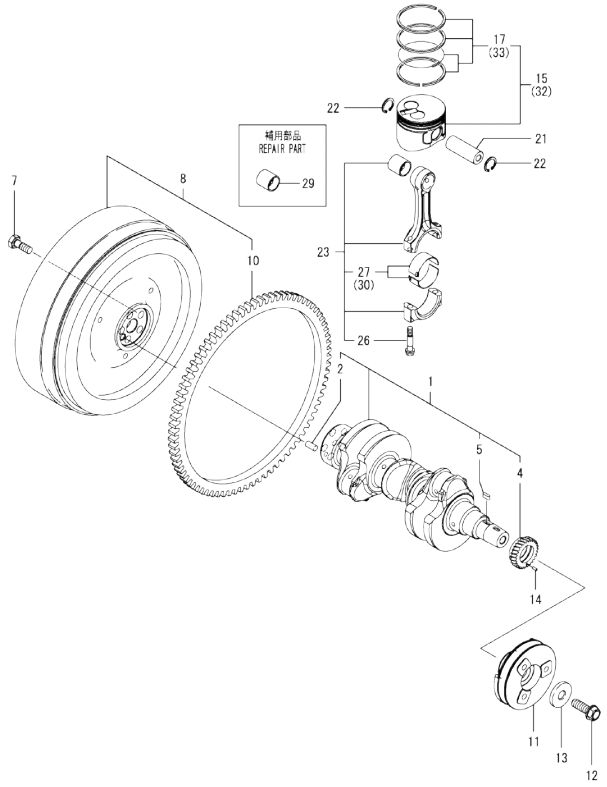

No.	Lev.	Parts No.	Description	Q'ty (A)	(B)	(C)	(D)	(E)	(F)	I	R
1	1	119125-21700	CRANKSHAFT ASSY	1							
2	2	129100-01580	PIN, PARALLEL 8X16	1							
4	2	119125-21200	GEAR, CRANKSHAFT	1							
5	2	22512-040120	KEY, 4X 12	1							
7	1	121111-21501	BOLT, FLYWHEEL	5							
8	1	119128-21591	FLYWHEEL ASSY	1							
8-1	1	119D00-21580	FLYWHEEL ASSY	1						F	4
	(A=*2014.05.)										
10	2	119865-21600	GEAR, RING Z=116	1							
11	1	119125-21650	V-PULLEY, CRANKSHAFT	1							
12	1	119621-21681	BOLT, FLANGE 12X1.25	1							
13	1	119620-21941	WASHER, 12	1							
14	1	22351-030010	PIN, SPRING 3.0X10	1							
15	1	119125-22080	PISTON ASSY	3							
17	2	119125-22500	RING SET, PISTON	3							
21	1	119125-22300	PIN, PISTON	3							
22	1	22252-000200	RING, 20	6							
23	1	119125-23000	ROD ASSY, CONNECTING	3							
26	2	119717-23200	BOLT, CONNECTING ROD	6							
27	2	119515-23601	METAL ASSY,CRANK PIN	3							
29	1	119260-23910	METAL, PISTON PIN	3							1
30	1	119515-23611	METAL ASSY, PIN .25	3							2
32	1	119125-22900	PISTON ASSY, 0.25 OS	3							3
33	2	119125-22550	RING SET, PISTON .25	3							3

Remarks
(1)Spare parts.
(2)Under-sized(U.S.=0.25) parts.
(3)Over-sized(O.S.=0.25) parts.
(4)Fig.3 No.2-1 & Fig.15 No.1-1 interchangeable by set.

N:Old ←Yes/No→ New. Q:Old ←No/Yes→ New. R:Old ←Yes/Yes→ New. S:Old ←No/No→ New. W:Add. Z:Discontinued. F:Interchangeable by set. K:Q'ty Change

Copyright (C) YANMAR CO., LTD. All RightsReserved.

0CW10-M64400 3TNM68-GHFCG

Fig.9. LUB.OIL SYSTEM

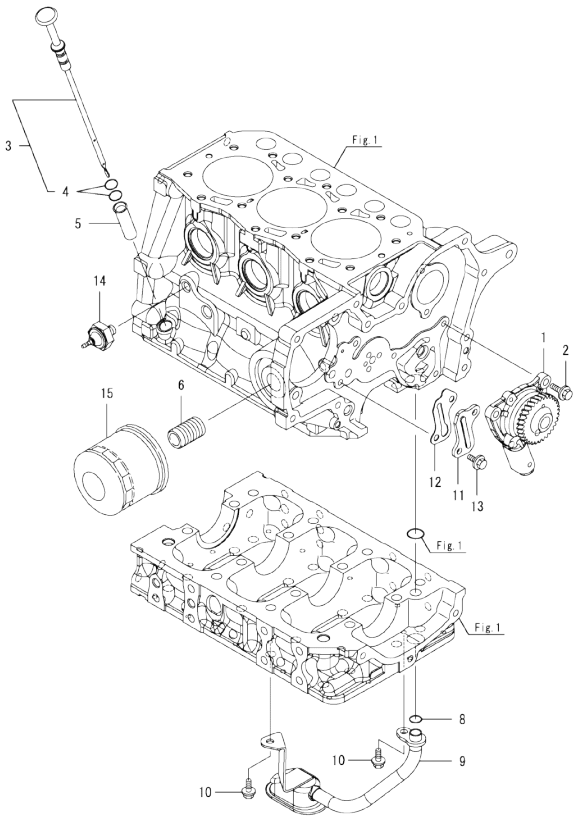

0CW10-M64400 Fig.9

(A)=3TNM68-GHFCG
(B)=
(C)=
(D)=
(E)=
(F)=

No.	Lev.	Parts No.	Description	Q'ty (A)	(B)	(C)	(D)	(E)	(F)	I	R
1	1	119125-32000	PUMP ASSY, OIL	1							
2	1	26106-060142	BOLT, M6X 14 PLATED	3							
3	1	119125-34800	DIPSTICK, OIL	1							
4	2	119125-34900	O-RING	2							
5	1	119125-34810	GUIDE, DIPSTICK	1							
6	1	119717-35140	BOLT	1							
8	1	119209-35030	O-RING, P11	1							
9	1	119125-35080	PIPE ASSY, OIL INLET	1							
10	1	26106-060102	BOLT, M6X 10 PLATED	2							
11	1	119125-39200	COVER	1							
12	1	119125-39220	GASKET	1							
13	1	26106-060102	BOLT, M6X 10 PLATED	2							
14	1	114250-39450	SWITCH, 0.5KG	1							
15	1	119305-35170	FILTER ASSY, D68XL65	1							1

Remarks
(1)Repair part.

N:Old $\frac{\text{Yes}}{\text{No}}$ New. Q:Old $\frac{\text{No}}{\text{Yes}}$ New. R:Old $\frac{\text{Yes}}{\text{Yes}}$ New. S:Old $\frac{\text{No}}{\text{No}}$ New. W:Add. Z:Discontinued. F:Interchangeable by set. K:Q'ty Change

Copyright (C) YANMAR CO., LTD. All RightsReserved.

Fig.10. COOLING WATER SYSTEM

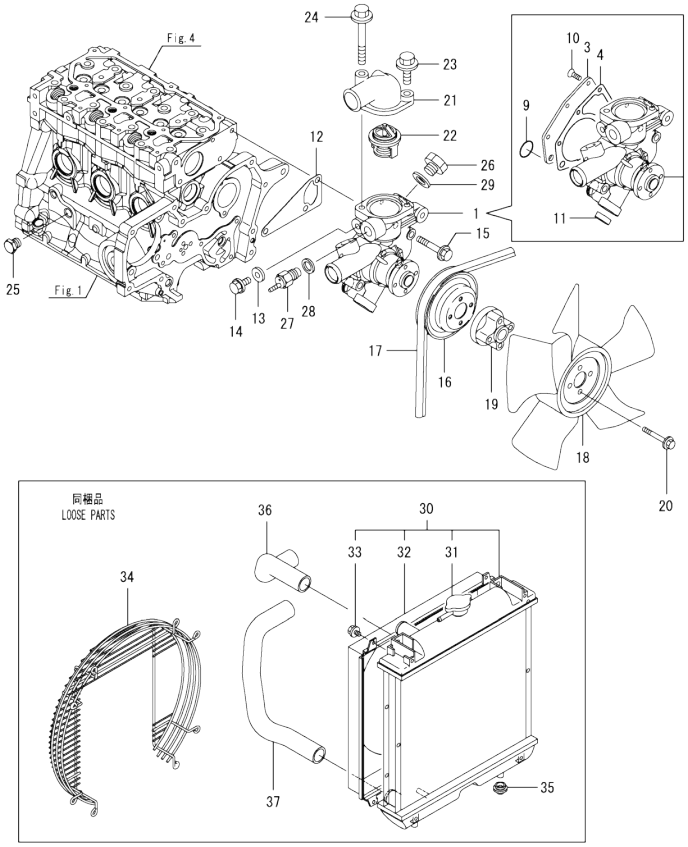

(A)=3TNM68-GHFCG
(B)=
(C)=
(D)=
(E)=
(F)=

No.	Lev.	Parts No.	Description	Q'ty (A)	(B)	(C)	(D)	(E)	(F)	I	R
1	1	119125-42000	PUMP ASSY, WATER	1							
3	2	119125-42020	COVER	1							
4	2	119125-42030	GASKET, WATER PUMP	1							
9	2	119209-42320	O-RING, P21 EPDM	1							
10	2	26577-060122	SCREW, M6X12	4							
11	2	27241-220000	PLUG, 22	1							
12	1	119260-42021	GASKET, WATER PUMP	1							
13	1	23414-080000	GASKET, 8X1.0	1							
14	1	26106-080122	BOLT, M8X 12 PLATED	1							
15	1	26106-080452	BOLT, M8X 45 PLATED	3							
16	1	119740-42350	V-PULLEY, D=90	1							
17	1	25132-003400	V-BELT, A34	1							
18	1	119265-44740	FAN, D=310X5F	1							
19	1	129457-44760	SPACER, FAN	1							
20	1	26106-060452	BOLT, M6X 45 PLATED	4							
21	1	124101-49531	COVER, THERMOSTAT	1							
22	1	119717-49800	THERMOSTAT, 71	1							
23	1	26106-080252	BOLT, M8X 25 PLATED	1							
24	1	26106-080652	BOLT, M8X 65 PLATED	1							
25	1	171056-49120	PLUG, DRAIN	1							
26	1	121450-42450	PLUG, M16	1							
27	1	121250-44901	SWITCH, 110	1							
28	1	124465-44950	GASKET, 16	1							
29	1	124465-44950	GASKET, 16	1							
30	1	119515-44560	RADIATOR	1							
31	2	129107-44590	CAP, RADIATOR	1							
32	2	119515-44600	SHROUD	1							
33	2	26014-060122	BOLT, M6X 12	4							
34	1	119802-44560	GUARD	1							
35	1	119255-44660	ABSORBER	2							
36	1	119128-49050	PIPE, WATER	1							
37	1	119128-49060	PIPE, WATER	1							

N:Old ←Yes/No→ New. Q:Old ←No/Yes→ New. R:Old ←Yes/Yes→ New. S:Old ←No/No→ New. W:Add. Z:Discontinued. F:Interchangeable by set. K:Q'ty Change

Copyright (C) YANMAR CO., LTD. All RightsReserved.

Fig.11. FUEL INJECTION PUMP

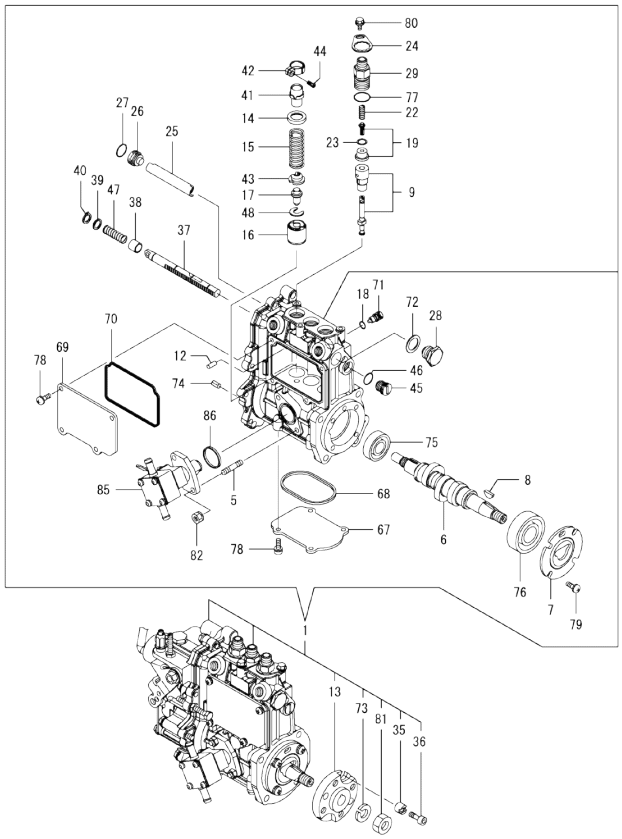

Remarks
(1)Governor(Fig.12)is incorporated in
this Fuel Injection Pump (Ref.1).

(A)=3TNM68-GHFCG (D)=
(B)= (E)=
(C)= (F)=

No.	Lev.	Parts No.	Description	Q'ty (A)	(B)	(C)	(D)	(E)	(F)	I	R
1	1	719128-51310	PUMP ASSY, INJECTION	1							1
5	2	129155-51020	STUD	2							
6	2	119125-51030	CAMSHAFT	1							
7	2	119125-51060	RETAINER, BEARING	1							
8	2	122710-51090	KEY	1							
9	2	119125-51100	PLUNGER ASSY	3							
12	2	129155-51140	PIN	3							
13	2	119717-51150	FLANGE	1							
14	2	158600-51170	RETAINER, SPRING	3							
15	2	119717-51190	SPRING, PLUNGER	3							
16	2	119125-51241	TAPPET	3							
17	2	119125-51250	GUIDE, TAPPET	3							
18	2	129155-51280	O-RING, S6	1							
19	2	119125-51300	VALVE ASSY, DELIVERY	3							
22	2	128990-51330	SPRING, DELIVERY	3							
23	2	124550-51350	GASKET, DELIVERY	3							
24	2	118400-51370	LOCKING	3							
25	2	129155-51400	DEFLECTOR	1							
26	2	158600-51410	PLUG, DEFLECTOR	1							
27	2	119717-51420	O-RING	1							
28	2	158600-51420	PLUG, DEFLECTOR	1							
29	2	158600-51442	VALVE ASSY, DELIVERY	3							
35	2	119125-51480	COLLAR	1							
36	2	119125-51490	BOLT	1							
37	2	119717-51500	RACK, CONTROL	1							
38	2	129155-51521	BUSH, RACK	1							
39	2	129155-51530	SPACER	1							
40	2	129155-51540	CIRCLIP	1							
41	2	129155-51550	PINION, CONTROL	3							
42	2	129100-51560	PINION	3							
43	2	119717-51570	RETAINER, SPRING	3							
44	2	129100-51570	SCREW	3							
45	2	158600-51570	PLUG	1							
46	2	129155-51580	O-RING	1							
47	2	129155-51591	SPRING, RACK	1							
48	2	129155-51600	SHIM SET, ADJUSTING	3							
67	2	119125-51700	COVER	1							
68	2	119717-51711	GASKET	1							
69	2	119717-51750	COVER	1							
70	2	119717-51761	GASKET	1							
71	2	158600-51790	STOOPER, RACK	1							
72	2	22190-160002	WASHER, SEAL 16	1							
73	2	22217-120000	WASHER, SPRING 12	1							
74	2	22351-050010	PIN, SPRING 5.0X10	2							
75	2	24101-060034	BEARING, BALL 6003	1							
76	2	24101-063034	BEARING, BALL 6303	1							
77	2	24316-000150	O-RING, 4DP15.0	3							
78	2	26022-050122	SCREW, M5X12	8							
79	2	26022-060162	SCREW, M6X16	4							
80	2	26106-050102	BOLT, M5X 10 PLATED	3							
81	2	26716-120002	NUT, M12	1							

N:Old $\xleftarrow[\text{No}]{\text{Yes}}$ New. Q:Old $\xleftarrow[\text{Yes}]{\text{No}}$ New. R:Old $\xleftarrow[\text{Yes}]{\text{Yes}}$ New. S:Old $\xleftarrow[\text{No}]{\text{No}}$ New. W:Add. Z:Discontinued. F:Interchangeable by set. K:Q'ty Change

++ CONTINUE ++

Copyright (C) YANMAR CO., LTD. All RightsReserved.

Fig.11. FUEL INJECTION PUMP

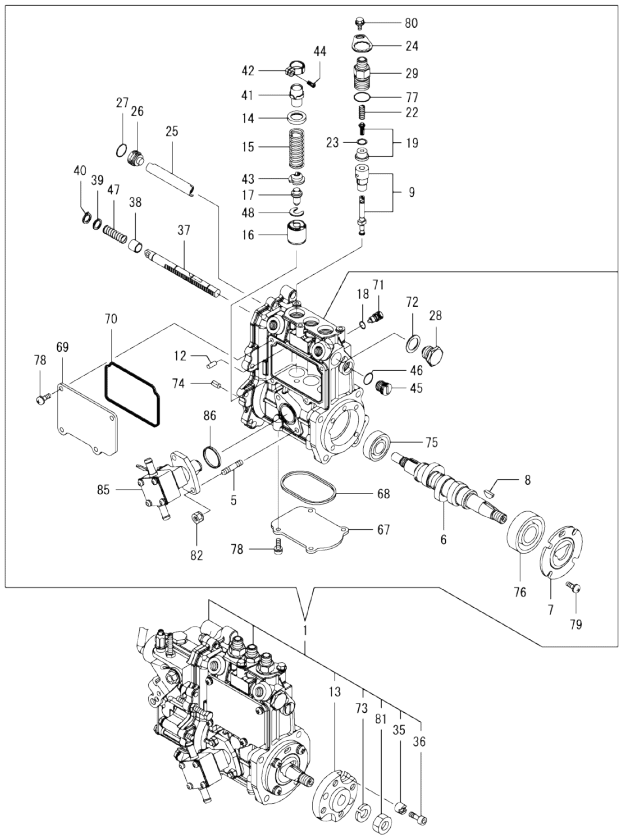

Remarks
(1)Governor(Fig.12)is incorporated in
this Fuel Injection Pump (Ref.1).

(A)=3TNM68-GHFCG (D)=
(B)= (E)=
(C)= (F)=

No.	Lev.	Parts No.	Description	Q'ty (A)	(B)	(C)	(D)	(E)	(F)	I	R
82	2	119717-51860	NUT, M6	2							
85	2	119125-52000	PUMP ASSY, FUEL FEED	1							
86	2	129155-52051	GASKET	1							

N:Old ←Yes/No→ New. Q:Old ←No/Yes→ New, R:Old ←Yes/Yes→ New. S:Old ←No/No→ New. W:Add. Z:Discontinued. F:Interchangeable by set. K:Q'ty Change

Copyright (C) YANMAR CO., LTD. All RightsReserved.

Fig.12. GOVERNOR

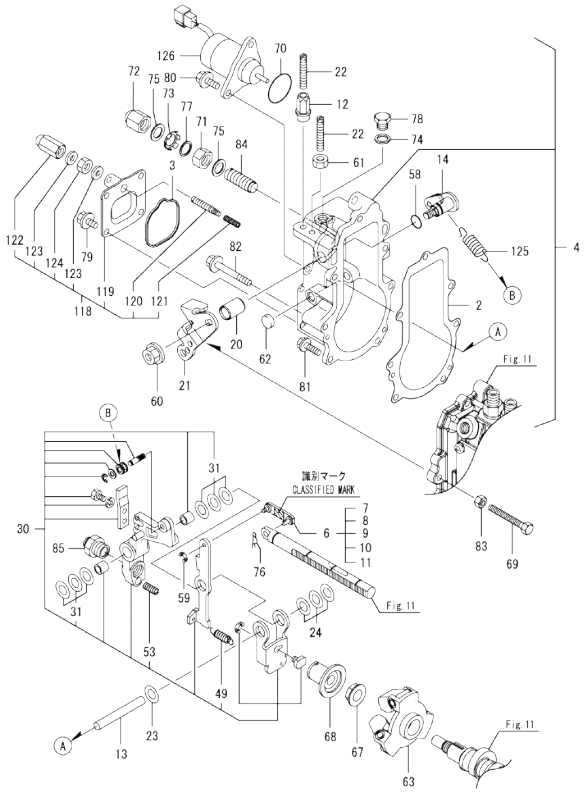

Remarks
*This figure(Governor)is incorporated in the Fuel Injection Pump (Fig.11).
(1)Selective parts; certain the classification mark, then place your order (ref. to illustration).

(A)=3TNM68-GHFCG (D)=
(B)= (E)=
(C)= (F)=

No.	Lev.	Parts No.	Description	Q'ty (A)	(B)	(C)	(D)	(E)	(F)	I	R
2	2	119717-61050	GASKET	1							
3	2	119717-61070	GASKET	1							
4	2	119128-61100	CASE ASSY, GOVERNOR	1							
6	3	119125-61110	LINK ASSY	1							
7	4	119125-61120	LINK, MARK 93	1							1
8	4	119125-61130	LINK, MARK 98	1							1
9	4	119125-61140	LINK, MARK 88	1							1
10	4	119125-61150	LINK, MARK 00	1							1
11	4	119125-61160	LINK, MARK 03	1							1
12	3	129209-61370	NUT, M6	1							
13	3	119125-61390	SHAFT	1							
14	3	119125-61401	SHAFT ASSY	1							
20	3	119125-61430	BUSH	1							
21	3	119546-61440	LEVER, CONTROL	1							
22	3	129155-61450	BOLT, LIMITER	2							
23	3	129156-61460	SHIM, T=0.6	1							
24	3	129155-61480	SPACER ASSY	1							
30	3	119128-61501	LEVER ASSY, GOVERNOR	1							
31	4	174307-51700	SHIM SET	2							
49	4	129486-61540	SPRING, SET	1							
53	4	129486-61650	SPRING, STARTING	1							
58	3	129155-61830	O-RING, S10	1							
59	3	22272-000030	RING, E- 3	1							
60	3	26366-080002	NUT, M8	1							
61	3	26756-060002	NUT, LOCK M6	1							
62	3	27260-120000	PLUG, 12	1							
63	3	119125-61201	WEIGHT ASSY,GOVERNOR	1							
67	2	129008-61301	NUT	1							
68	2	129155-61341	SLEEVE	1							
69	2	129155-61460	BOLT, IDLE	1							
70	2	158552-61900	O-RING	1							
71	2	129209-61920	NUT, ARB	1							
72	2	129209-61930	NUT, CAP	1							
73	2	129209-61970	PLATE	1							
74	2	22190-100002	WASHER, SEAL 10	1							
75	2	22190-120002	WASHER, SEAL 12	2							
76	2	22372-040000	PIN, SNAP 4	1							
77	2	23414-120016	GASKET, 12X1.0	1							
78	2	23887-100002	PLUG, 10	1							
79	2	26106-060102	BOLT, M6X 10 PLATED	4							
80	2	26106-060142	BOLT, M6X 14 PLATED	2							
81	2	26106-060202	BOLT, M6X 20 PLATED	4							
82	2	26106-060452	BOLT, M6X 45 PLATED	3							
83	2	26756-060002	NUT, LOCK M6	1							
84	2	120323-61470	BOLT, CONTROL	1							
85	2	119746-61550	ANGLEICH ASSY	1							
118	2	119746-61600	COVER ASSY	1							
119	3	119746-61060	COVER, GOVERNOR CASE	1							
120	3	119645-61070	SCREW	1							
121	3	119746-61080	SPRING	1							
122	3	119600-66840	NUT, CAP	1							

N:Old ←Yes/No→ New. Q:Old ←No/Yes→ New. R:Old ←Yes/Yes→ New. S:Old ←No/No→ New. W:Add. Z:Discontinued. F:Interchangeable by set. K:Q'ty Change

++ CONTINUE ++

Copyright (C) YANMAR CO., LTD. All RightsReserved.

Fig.12. GOVERNOR

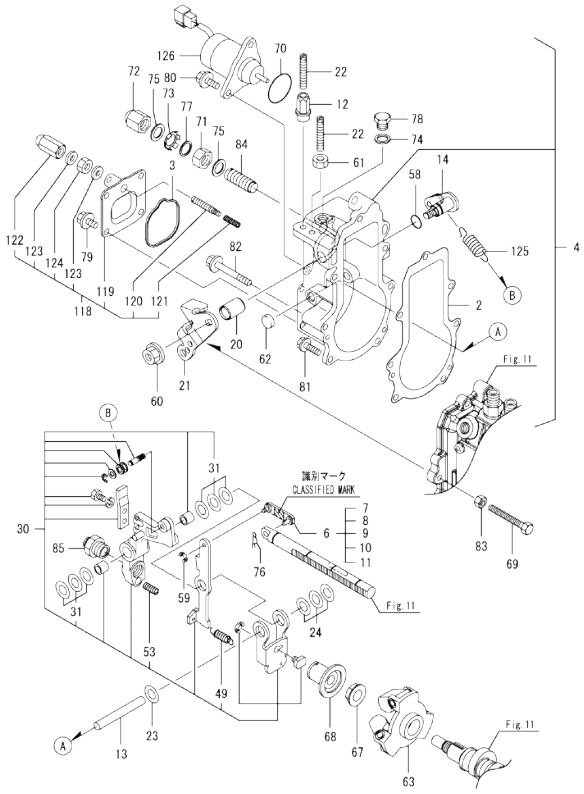

Remarks
*This figure(Governor)is incorporated in the Fuel Injection Pump (Fig.11).
(1)Selective parts; certain the classification mark, then place your order (ref. to illustration).

(A)=3TNM68-GHFCG
(B)=
(C)=
(D)=
(E)=
(F)=

No.	Lev.	Parts No.	Description	Q'ty (A)	(B)	(C)	(D)	(E)	(F)	I	R
123	3	22190-060003	SEAL WASER 6	2							
124	3	26756-060002	NUT, LOCK M6	1							
125	2	119128-61700	SPRING, GOVERNOR	1							
126	2	119653-77950	SOLENOID, STOP	1							

N:Old ←Yes/No→ New. Q:Old ←No/Yes→ New. R:Old ←Yes/Yes→ New. S:Old ←No/No→ New. W:Add. Z:Discontinued. F:Interchangeable by set. K:Q'ty Change

Copyright (C) YANMAR CO., LTD. All RightsReserved.

Fig.13. FUEL INJECTION VALVE

(A)=3TNM68-GHFCG
(B)=
(C)=
(D)=
(E)=
(F)=

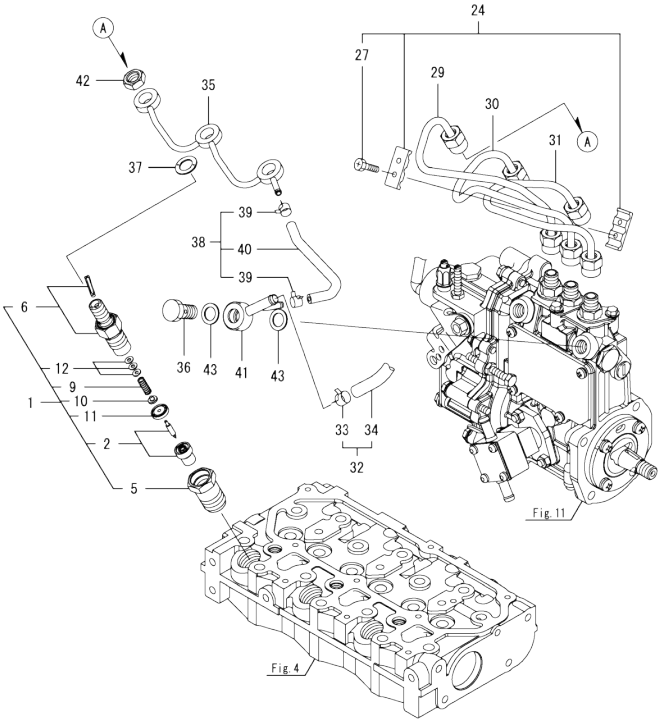

No.	Lev.	Parts No.	Description	Q'ty (A)	(B)	(C)	(D)	(E)	(F)	I	R
1	1	719025-53100	VALVE ASSY,INJECTION	3							
2	2	119025-53000	VALVE ASSY,INJECTION	3							
5	2	119125-53080	NUT, NOZZLE	3							
6	2	119125-53100	HOLDER ASSY, NOZZLE	3							
9	2	119125-53120	SPRING, NOZZLE	3							
10	2	119125-53130	SEAT, SPRING	3							
11	2	119125-53140	SPACER, VALVE STOP	3							
12	2	114250-53400	SHIM SET	3							
24	1	129150-59120	RETAINER, PIPE	1							
27	2	129150-59131	BOLT, M4X14	2							
29	1	119125-59850	PIPE, FUEL INJECTION	1							
30	1	119125-59860	PIPE, FUEL INJECTION	1							
31	1	119125-59870	PIPE, FUEL INJECTION	1							
32	1	129210-59140	PIPE ASSY, FUEL	1							
33	2	124766-59050	CLIP, HOSE 12	2							
34	2	105230-59510	PIPE, FUEL	1							
35	1	119125-59540	PIPE ASSY, RETURN	1							
36	1	119125-59560	BOLT, PIPE JOINT	1							
37	1	129901-59560	GASKET	3							
38	1	119125-59570	PIPE ASSY, RETURN	1							
39	2	124066-59100	CLIP, HOSE 8	2							
40	2	119000-59550	PIPE, FUEL RETURN	1							
41	1	119840-59570	JOINT	1							
42	1	119620-59700	NUT, NOZZLE	3							
43	1	22190-120002	WASHER, SEAL 12	2							

N:Old ←Yes/No→ New. Q:Old ←No/Yes→ New. R:Old ←Yes/Yes→ New. S:Old ←No/No→ New. W:Add. Z:Discontinued. F:Interchangeable by set. K:Q'ty Change

Copyright (C) YANMAR CO., LTD. All RightsReserved.

Fig.14. FUEL LINE

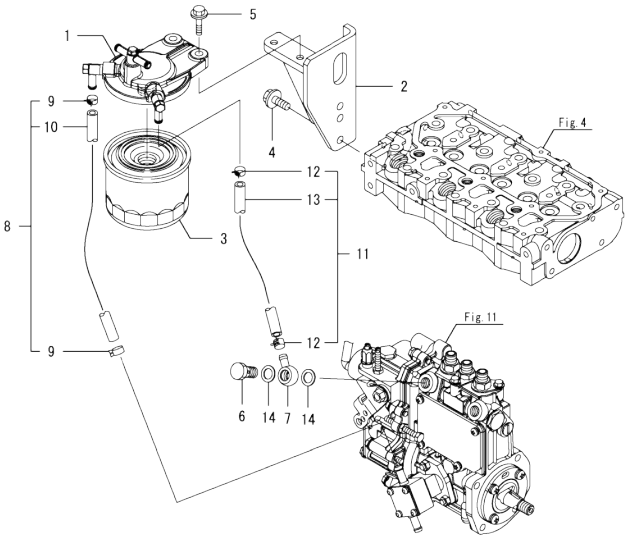

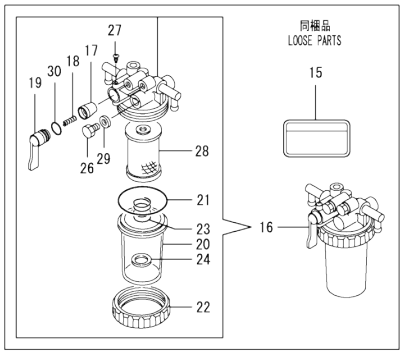

(A)=3TNM68-GHFCG
(B)=
(C)=
(D)=
(E)=
(F)=

No.	Lev.	Parts No.	Description	Q'ty (A)	(B)	(C)	(D)	(E)	(F)	I	R
1	1	119934-55611	BRACKET, FILTER	1							
2	1	119128-55690	BRACKET, FILTER	1							
3	1	119802-55810	FILTER,FO	1							
4	1	26106-080162	BOLT, M8X 16 PLATED	2							
5	1	26106-080252	BOLT, M8X 25 PLATED	2							
6	1	103854-39140	BOLT, PIPE JOINT	1							
7	1	101304-59020	JOINT, PIPE 12	1							
8	1	129210-59140	PIPE ASSY, FUEL	1							
9	2	124766-59050	CLIP, HOSE 12	2							
10	2	105230-59510	PIPE, FUEL	1							
11	1	129210-59230	PIPE ASSY, FUEL	1							
12	2	124766-59050	CLIP, HOSE 12	2							
13	2	129555-59511	PIPE, FUEL	1							
14	1	22190-120002	WASHER, SEAL 12	2							
15	1	114110-07760	LABEL, FUEL CAUTION	1							
16	1	129335-55700	SEPARATOR ASSY,WATER	1							
17	2	104200-55321	VALVE, TAPER	1							
18	2	104200-55330	SPRING, VALVE	1							
19	2	104200-55341	HANDLE	1							
20	2	124064-55510	COVER	1							
21	2	102103-55520	O-RING	1							
22	2	110250-55610	RING, RETAINING	1							
23	2	121257-55720	SPRING	1							
24	2	121257-55731	FLOAT	1							
26	2	101720-55750	PLUG, 6	2							
27	2	104200-55750	SCREW, M4	1							
28	2	171081-55910	SCREEN	1							
29	2	23418-060000	GASKET, 6X1.0	2							
30	2	24311-240100	O-RING, 1AP10A	1							

N:Old ←Yes/No→ New. Q:Old ←No/Yes→ New. R:Old ←Yes/Yes→ New. S:Old ←No/No→ New. W:Add. Z:Discontinued. F:Interchangeable by set. K:Q'ty Change

Copyright (C) YANMAR CO., LTD. All RightsReserved.

Fig.15. STARTING MOTOR

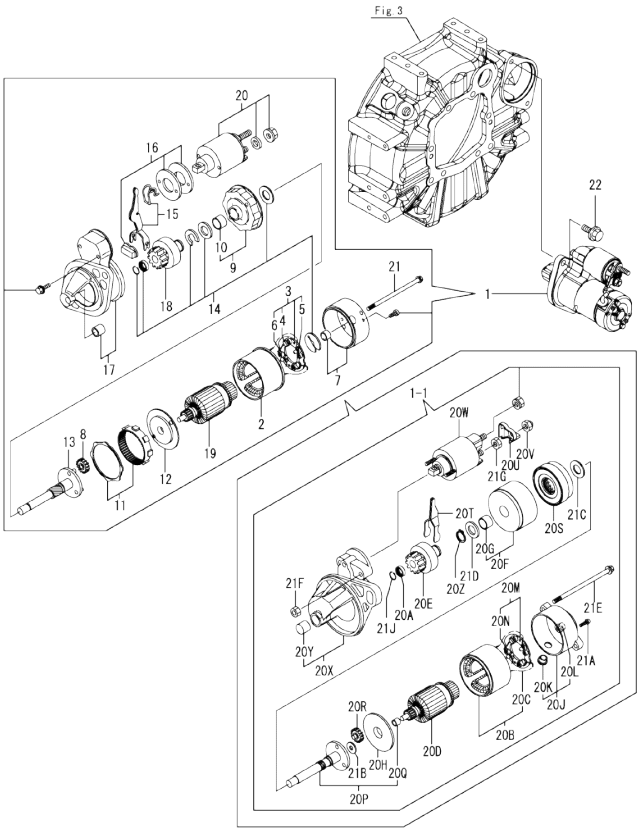

(A)=3TNM68-GHFCG (D)=
(B)= (E)=
(C)= (F)=

No.	Lev.	Parts No.	Description	Q'ty (A)	(B)	(C)	(D)	(E)	(F)	I	R
1	1	119125-77010	STARTER ASSY, 1.2KW	1							
1-1	1	119515-77010	STARTER, P1.0	1						F	1
	(A=*2014.05.)										
2	2	129698-77110	YOKE ASSY	1						Z	
	(A=*2014.05.)										
3	2	129698-77120	HOLDER ASSY, BRUSH	1						Z	
	(A=*2014.05.)										
4	3	129698-77130	BRUSH	2						Z	
	(A=*2014.05.)										
5	3	129698-77140	BRUSH SET	1						Z	
	(A=*2014.05.)										
6	3	129698-77150	SPRING, BRUSH	4						Z	
	(A=*2014.05.)										
7	2	129698-77161	COVER ASSY, STARTER	1						Z	
	(A=*2014.05.)										
8	2	119125-77170	GEAR, PLANETARY	3						Z	
	(A=*2014.05.)										
9	2	129698-77180	BRACKET, CENTER P	1						Z	
	(A=*2014.05.)										
10	3	129698-77190	BRACKET, CENTER	1						Z	
	(A=*2014.05.)										
11	2	119125-77200	GEAR, INTERNAL	1						Z	
	(A=*2014.05.)										
12	2	119125-77210	BRACKET, CENTER A	1						Z	
	(A=*2014.05.)										
13	2	119125-77230	SHAFT, PINION	1						Z	
	(A=*2014.05.)										
14	2	129698-77250	WASHER SET	1						Z	
	(A=*2014.05.)										
15	2	119125-77270	LEVER SET, SHIFT	1						Z	
	(A=*2014.05.)										
16	2	119125-77280	COVER KIT, DUST	1						Z	
	(A=*2014.05.)										
17	2	119125-77520	CASE ASSY, GEAR	1						Z	
	(A=*2014.05.)										
18	2	119125-77660	PINION ASSY	1						Z	
	(A=*2014.05.)										
19	2	119125-77710	ARMATURE ASSY	1						Z	
	(A=*2014.05.)										
20	2	119125-77760	SWITCH ASSY, MAGNET	1						Z	
	(A=*2014.05.)										
20A	2	X0280210331	NUT	1						W	
	(A=*2014.05.)										
20B	2	X0281007680	YOKE ASSY	1						W	
	(A=*2014.05.)										
20C	3	X0280996180	STARTER KIT	2						W	
	(A=*2014.05.)										
20D	2	X0282005871	ARMATURE ASSY	1						W	
	(A=*2014.05.)										
20E	2	X0283006960	CLUTCH	1						W	
	(A=*2014.05.)										

Remarks
(1)Fig.3 No.2-1 & Fig.8 No.8-1 interchangeable by set.

N:Old $\frac{\text{Yes}}{\text{No}}$ New. Q:Old $\frac{\text{No}}{\text{Yes}}$ New. R:Old $\frac{\text{Yes}}{\text{Yes}}$ New. S:Old $\frac{\text{No}}{\text{No}}$ New. W:Add. Z:Discontinued. F:Interchangeable by set. K:Q'ty Change

++ CONTINUE ++

Copyright (C) YANMAR CO., LTD. All RightsReserved.

Fig.15. STARTING MOTOR

(A)=3TNM68-GHFCG
(B)=
(C)=
(D)=
(E)=
(F)=

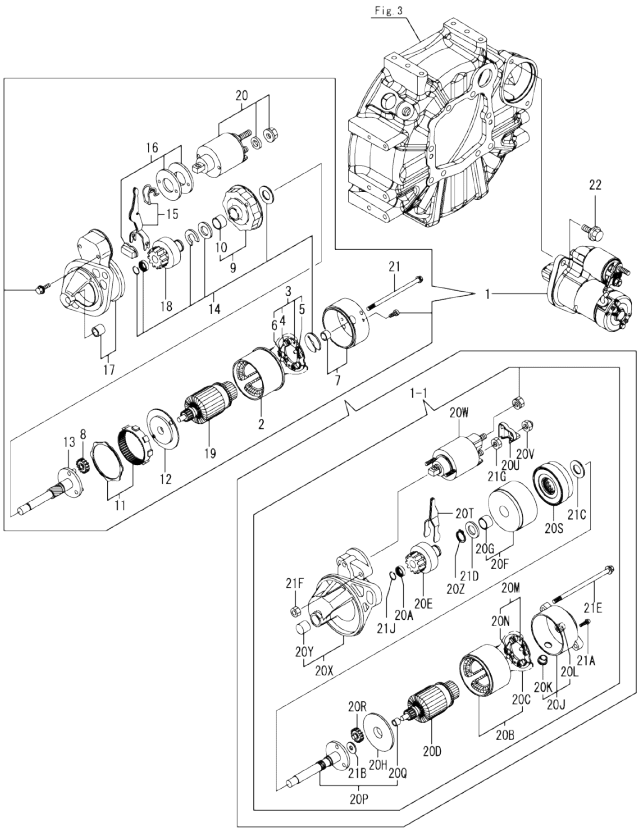

No.	Lev.	Parts No.	Description	Q'ty (A)	(B)	(C)	(D)	(E)	(F)	I	R
20F	2	X0284105040	BEARING ASSY, SUB	1						W	
	(A=*2014.05.)										
20G	3	X9491034330	BEARING	1						W	
	(A=*2014.05.)										
20H	2	X0284525010	PLATE	1						W	
	(A=*2014.05.)										
20J	2	X0285007030	FRAME ASSY	1						W	
	(A=*2014.05.)										
20K	3	X0280626010	COVER	1						W	
	(A=*2014.05.)										
20L	3	X9491040990	BEARING	1						W	
	(A=*2014.05.)										
20M	2	X0285105190	HOLDER ASSY	1						W	
	(A=*2014.05.)										
20N	3	X0285205030	SPRING	4						W	
	(A=*2014.05.)										
20P	2	X0286105010	SHAFT ASSY, SUB	1						W	
	(A=*2014.05.)										
20Q	3	X9491034320	BEARING	1						W	
	(A=*2014.05.)										
20R	2	X0286305010	GEAR	3						W	
	(A=*2014.05.)										
20S	2	X0286355010	GEAR	1						W	
	(A=*2014.05.)										
20T	2	X0287405140	LEVER	1						W	
	(A=*2014.05.)										
20U	2	X1280330020	COVER, TERMINAL	1						W	
	(A=*2014.05.)										
20V	2	X1289510130	NUT	1						W	
	(A=*2014.05.)										
20W	2	X2534000090	SWITCH ASSY	1						W	
	(A=*2014.05.)										
20X	2	X4284001590	HOUSING ASSY	1						W	
	(A=*2014.05.)										
20Y	3	X9491050100	BEARING, NEEDLE	1						W	
	(A=*2014.05.)										
20Z	2	X9055715000	RING	1						W	
	(A=*2014.05.)										
21	2	124195-77770	BOLT, THROUGH	2						Z	
	(A=*2014.05.)										
21A	2	X9490065670	SCREW, M4X6	2						W	
	(A=*2014.05.)										
21B	2	X9490138090	WASHER	1						W	
	(A=*2014.05.)										
21C	2	X9490138100	WASHER	1						W	
	(A=*2014.05.)										
21D	2	X9490138110	WASHER	1						W	
	(A=*2014.05.)										
21E	2	X9490423520	BOLT, THROUGH	2						W	
	(A=*2014.05.)										
21F	2	X9490560750	NUT	2						W	

Remarks
(1)Fig.3 No.2-1 & Fig.8 No.8-1 interchangeable by set.

N:Old ◄Yes/No► New. Q:Old ◄No/Yes► New. R:Old ◄Yes/Yes► New. S:Old ◄No/No► New. W:Add. Z:Discontinued. F:Interchangeable by set. K:Q'ty Change

++ CONTINUE ++

Copyright (C) YANMAR CO., LTD. All RightsReserved.

Fig.15. STARTING MOTOR

(A)=3TNM68-GHFCG
(B)=
(C)=
(D)=
(E)=
(F)=

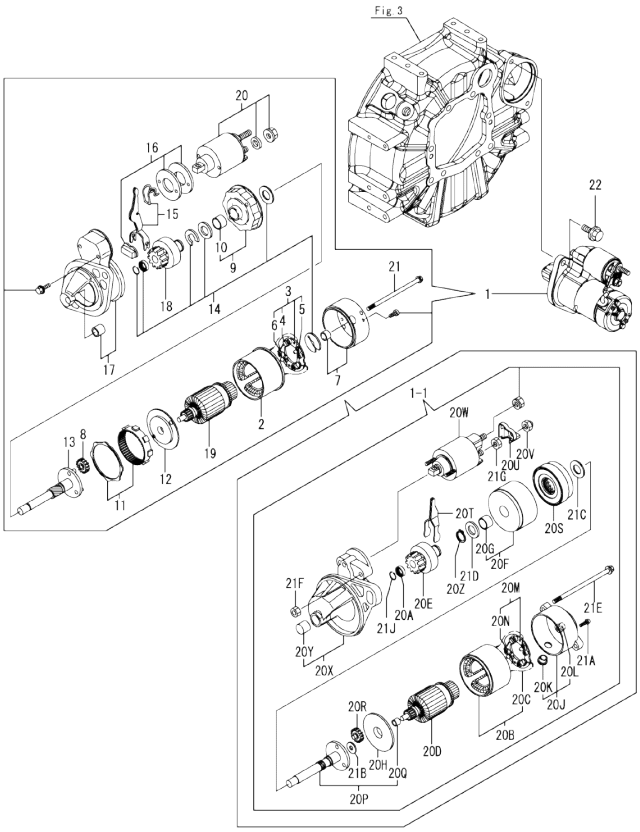

No.	Lev.	Parts No.	Description	Q'ty (A)	(B)	(C)	(D)	(E)	(F)	I	R
21G	(A=*2014.05.) 2	X9490562360	NUT	1						W	
21J	(A=*2014.05.) 2	X9490721360	RING	1						W	
22	(A=*2014.05.) 1	26106-100252	BOLT, M10X 25 PLATED	2							

Remarks
(1)Fig.3 No.2-1 & Fig.8 No.8-1 interchangeable by set.

N:Old ←Yes/No→ New. Q:Old ←No/Yes→ New. R:Old ←Yes/Yes→ New. S:Old ←No/No→ New. W:Add. Z:Discontinued. F:Interchangeable by set. K:Q'ty Change

Copyright (C) YANMAR CO., LTD. All RightsReserved.

Fig.16. GENERATOR

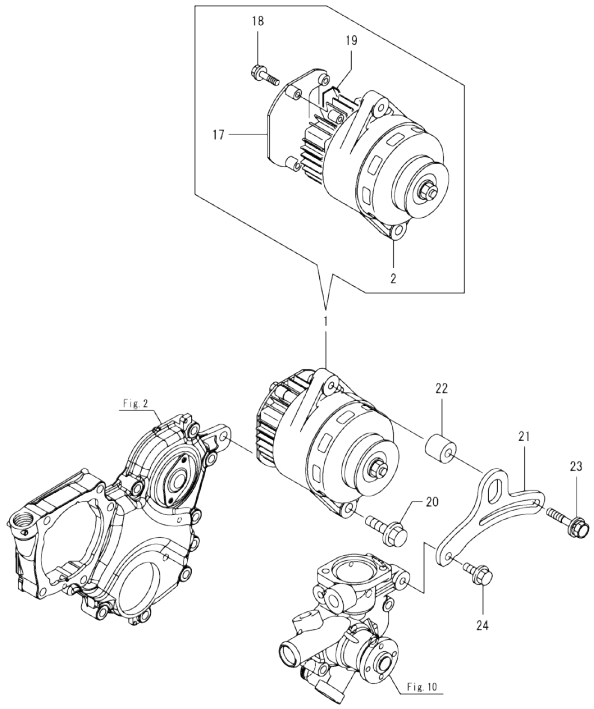

Remarks
*This item is applicable to [(A)=EXXXXX-1] or previous machines. Refer to Fig.19.

(A)=3TNM68-GHFCG (D)=
(B)= (E)=
(C)= (F)=

No.	Lev.	Parts No.	Description	Q'ty (A)	(B)	(C)	(D)	(E)	(F)	I	R
1	1	119128-77200	GENERATOR, 12V-40A	1							
2	2	119128-77220	GENERATOR ASSY	1							
17	2	119128-77370	COVER	1							
18	2	119128-77380	BOLT, FLANGE	4							
19	2	119128-77390	COVER	1							
20	1	26106-100402	BOLT, M10X 40 PLATED	1							
21	1	119125-77320	ADJUSTER	1							
22	1	124732-77340	SPACER	1							
23	1	129972-77341	BOLT, ADJUSTER L=50	1							
24	1	26106-080202	BOLT, M8X 20 PLATED	1							

N:Old ←Yes/No→ New. Q:Old ←No/Yes→ New. R:Old ←Yes/Yes→ New. S:Old ←No/No→ New. W:Add. Z:Discontinued. F:Interchangeable by set. K:Q'ty Change

Copyright (C) YANMAR CO., LTD. All RightsReserved.

Fig.18. (16A)GENERATOR

(A)=3TNM68-GHFCG
(B)=
(C)=
(D)=
(E)=
(F)=

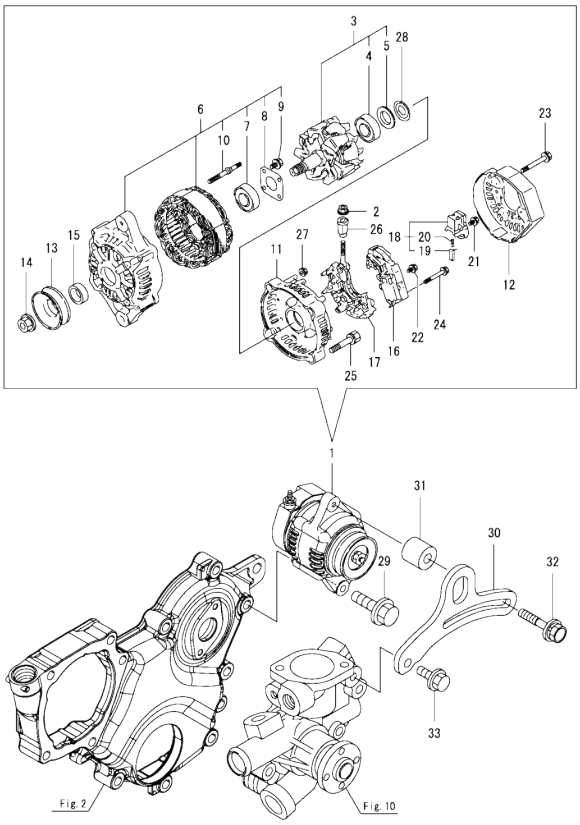

No.	Lev.	Parts No.	Description	Q'ty (A)	(B)	(C)	(D)	(E)	(F)	I	R
1	1	129423-77200	GENERATOR, 12V-40A	1							
2	2	X9490561001	NUT	1							
3	2	119620-77380	ROTOR ASSY	1							
4	3	123501-79240	BEARING, BALL	1							
5	3	119620-79250	COVER	1							
6	2	119620-77421	FRAME ASSY, DRIVE	1							
7	3	119620-79200	BEARING, BALL	1							
8	3	119620-79210	PLATE, RETAINER	1							
9	3	119620-79220	SCREW	4							
10	3	119620-79230	STUD	2							
11	2	119620-77440	FRAME ASSY	1							
12	2	129240-79300	COVER	1							
13	2	119620-77461	PULLEY	1							
14	2	119620-77471	NUT	1							
15	2	119620-77490	COLLAR	1							
16	2	129423-77710	REGULATOR ASSY	1							
17	2	119620-79260	HOLDER	1							
18	2	129052-79270	HOLDER, BRUSH	1							
19	3	119620-77480	BRUSH ASSY	2							
20	3	119620-79280	SPRING	2							
21	2	119620-79290	SCREW	6							
22	2	119620-79300	SCREW	1							
23	2	119620-79310	BOLT	3							
24	2	119620-79320	SCREW	2							
25	2	119620-79330	BOLT	2							
26	2	119620-79340	BUSH, INSULATION	1							
27	2	119620-79350	NUT	2							
28	2	119620-79360	WASHER, THRUST	1							
29	1	26106-100402	BOLT, M10X 40 PLATED	1							
30	1	119125-77320	ADJUSTER	1							
31	1	124732-77340	SPACER	1							
32	1	129972-77341	BOLT, ADJUSTER L=50	1							
33	1	26106-080202	BOLT, M8X 20 PLATED	1							
34	1	119643-66900	DIODE	1							
35	1	119650-77911	RELAY ASSY, GLOW	1							
38	1	129211-77920	TIMER	1							

Remarks
*This item is applicable to [(A)=EXXXXX] or following machines. Refer to Fig.16.

N:Old ←Yes/No→ New. Q:Old ←No/Yes→ New. R:Old ←Yes/Yes→ New. S:Old ←No/No→ New. W:Add. Z:Discontinued. F:Interchangeable by set. K:Q'ty Change

Copyright (C) YANMAR CO., LTD. All RightsReserved.

Fig.17. GASKET SET

(A)=3TNM68-GHFCG
(B)=
(C)=
(D)=
(E)=
(F)=

No.	Lev.	Parts No.	Description	Q'ty (A)	(B)	(C)	(D)	(E)	(F)	I	R
1	1	119125-92600	GASKET SET	1							1
2	2	119125-01330	GASKET, HEAD	1							
3	2	119125-01790	GASKET	1							
4	2	119125-11330	GASKET	1							
5	2	119125-11340	SEAL, VALVE STEM	6							
6	2	119125-11370	GASKET, BONNET	1							
7	2	129901-11450	PROTECTOR, NOZZLE	3							
8	2	119600-11460	GASKET, NOZZLE	6							
9	2	119125-13110	GASKET	1							
10	2	119515-13200	GASKET, SILENCER	1							
11	2	129900-32040	O-RING, P14	1							
12	2	119125-34900	O-RING	1							
13	2	119209-35030	O-RING, P11	1							
14	2	119125-39220	GASKET	1							
15	2	119260-42021	GASKET, WATER PUMP	1							
16	2	119275-42020	GASKET, WATER PUMP	1							
17	2	119125-42030	GASKET, WATER PUMP	1							
18	2	119209-42320	O-RING, P21 EPDM	1							
19	2	124465-44950	GASKET, 16	1							
20	2	119125-51800	GASKET	1							
21	2	129901-59560	GASKET	3							
22	2	22190-120002	WASHER, SEAL 12	5							
23	2	22190-160002	WASHER, SEAL 16	1							
24	2	23414-080000	GASKET, 8X1.0	1							
25	2	24311-000180	O-RING, 1AP18.0	2							
26	1	129400-92400	HONE	1							1
27	1	977770-1207F	GASKET.LIQUID	1							1

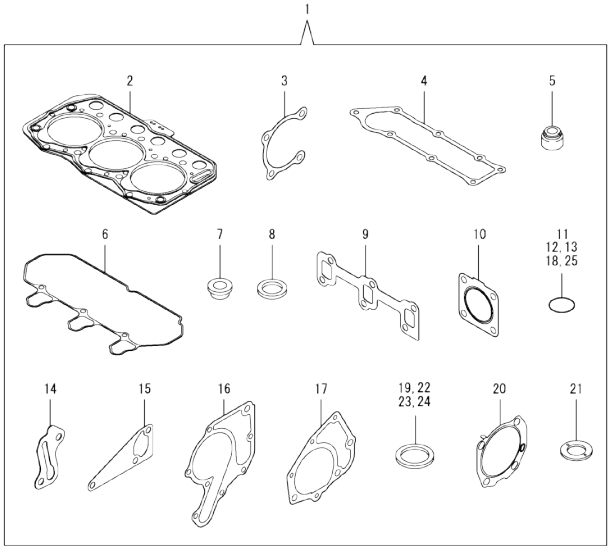

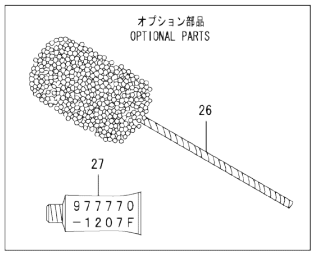

Remarks
(1)Optional parts.

N:Old ◄Yes/No► New. Q:Old ◄No/Yes► New. R:Old ◄Yes/Yes► New. S:Old ◄No/No► New. W:Add. Z:Discontinued. F:Interchangeable by set. K:Q'ty Change

Copyright (C) YANMAR CO., LTD. All RightsReserved.

Parts No. Index

Parts No.	Fig. No.	Ref. No.
101304-59020	14	7
101720-55750	14	26
102103-55520	14	21
103854-39140	14	6
104200-55321	14	17
104200-55330	14	18
104200-55341	14	19
104200-55750	14	27
105010-11230	4	28
105027-12580	5	5
105230-59510	13	34
	14	10
105425-01690	3	7
106760-01770	2	6
	4	33
110250-55610	14	22
114110-07760	14	15
114250-39450	9	14
114250-53400	13	12
118400-51370	11	24
119000-59550	13	40
119025-53000	13	2
119125-01330	1	31
	17	2
119125-01500	2	1
119125-01750	2	2
119125-01770	3	6
119125-01780	3	10
119125-01790	1	32
	17	3
119125-01800	1	35 -1
119125-01960	1	7
119125-01970	1	5
119125-02061	1	9
119125-02900	1	36
119125-02910	1	39
119125-02930	1	23
119125-02940	1	42
119125-11100	4	13
119125-11110	4	14
119125-11130	4	15
119125-11180	4	16
119125-11190	4	17
119125-11200	4	19
119125-11240	4	20
119125-11260	4	23
119125-11270	4	24
119125-11320	4	44
119125-11330	4	45
	17	4

Parts No.	Fig. No.	Ref. No.
119125-11340	4	18
	17	5
119125-11370	4	46
	17	6
119125-11380	4	34
119125-11650	4	27
119125-11740	4	4
119125-11800	4	55
119125-13110	6	1
	17	9
119125-13140	6	2
119125-14580	7	3
119125-21200	8	4
119125-21650	8	11
119125-21700	8	1
119125-22080	8	15
119125-22300	8	21
119125-22500	8	17
119125-22550	8	33
119125-22900	8	32
119125-23000	8	23
119125-25050	1	26
119125-25100	7	9
119125-25910	7	14
119125-25930	7	13
119125-32000	9	1
119125-34800	9	3
119125-34810	9	5
119125-34900	9	4
	17	12
119125-35080	9	9
119125-39200	9	11
119125-39220	9	12
	17	14
119125-42000	10	1
119125-42020	10	3
119125-42030	10	4
	17	17
119125-51030	11	6
119125-51060	11	7
119125-51100	11	9
119125-51241	11	16
119125-51250	11	17
119125-51300	11	19
119125-51480	11	35
119125-51490	11	36
119125-51700	11	67
119125-51800	1	34
	17	20
119125-52000	11	85

Parts No.	Fig. No.	Ref. No.
119125-53080	13	5
119125-53100	13	6
119125-53120	13	9
119125-53130	13	10
119125-53140	13	11
119125-59540	13	35
119125-59560	13	36
119125-59570	13	38
119125-59850	13	29
119125-59860	13	30
119125-59870	13	31
119125-61110	12	6
119125-61120	12	7
119125-61130	12	8
119125-61140	12	9
119125-61150	12	10
119125-61160	12	11
119125-61201	12	63
119125-61390	12	13
119125-61401	12	14
119125-61430	12	20
119125-77010	15	1
119125-77170	15	8
119125-77200	15	11
119125-77210	15	12
119125-77230	15	13
119125-77270	15	15
119125-77280	15	16
119125-77320	16	21
	18	30
119125-77520	15	17
119125-77660	15	18
119125-77710	15	19
119125-77760	15	20
119125-77800	4	53
119125-77820	4	54
119125-92600	17	1
119127-01560	1	1
119128-01670	3	2
119128-12520	5	1
119128-12570	5	9
119128-12640	5	10
119128-21591	8	8
119128-49050	10	36
119128-49060	10	37
119128-55690	14	2
119128-61100	12	4
119128-61501	12	30
119128-61700	12	125
119128-77200	16	1

Parts No.	Fig. No.	Ref. No.
119128-77220	16	2
119128-77370	16	17
119128-77380	16	18
119128-77390	16	19
119131-18320	6	5
119209-35030	9	8
	17	13
119209-42320	10	9
	17	18
119233-12700	5	8
119255-44660	10	35
119260-11270	4	25
119260-11280	4	26
119260-11370	4	1
119260-14200	7	1
119260-14400	7	2
119260-23910	8	29
119260-42021	10	12
	17	15
119265-44740	10	18
119266-01200	1	30
119275-42020	17	16
119305-35170	9	15
119515-13200	6	7
	17	10
119515-23601	8	27
119515-23611	8	30
119515-44560	10	30
119515-44600	10	32
119515-77010	15	1 -1
119546-61440	12	21
119600-11460	4	3
	17	8
119600-66840	12	122
119620-01620	1	13
119620-01750	3	3
119620-21941	8	13
119620-59700	13	42
119620-77380	18	3
119620-77421	18	6
119620-77440	18	11
119620-77461	18	13
119620-77471	18	14
119620-77480	18	19
119620-77490	18	15
119620-79200	18	7
119620-79210	18	8
119620-79220	18	9
119620-79230	18	10
119620-79250	18	5

Parts No. Index

Parts No.	Fig. No.	Ref. No.
119620-79260	18	17
119620-79280	18	20
119620-79290	18	21
119620-79300	18	22
119620-79310	18	23
119620-79320	18	24
119620-79330	18	25
119620-79340	18	26
119620-79350	18	27
119620-79360	18	28
119621-21681	8	12
119643-66900	18	34
119645-61070	12	120
119650-77911	18	35
119653-77950	12	126
119655-12560	5	3
119686-12570	5	4
119717-01800	2	3
119717-03031	4	35
119717-03070	4	36
		37
119717-13600	6	3
119717-23200	8	26
119717-35140	9	6
119717-49800	10	22
119717-51150	11	13
119717-51190	11	15
119717-51420	11	27
119717-51500	11	37
119717-51570	11	43
119717-51711	11	68
119717-51750	11	69
119717-51761	11	70
119717-51860	11	82
119717-61050	12	2
119717-61070	12	3
119734-02220	1	33
119740-42350	10	16
119746-61060	12	119
119746-61080	12	121
119746-61550	12	85
119746-61600	12	118
119802-03100	4	38
119802-03110	4	39
119802-03121	4	40
119802-03131	4	41
119802-03141	4	42
119802-13620	6	4
119802-44560	10	34
119802-55810	14	3

Parts No.	Fig. No.	Ref. No.
119808-12540	5	2
119840-59570	13	41
119865-21600	8	10
119888-01850	3	2 B
		4
119934-55611	14	1
119D00-01610	3	2 -1
119D00-21580	8	8 -1
120323-61470	12	84
121111-21501	8	7
121250-44901	10	27
121257-55720	14	23
121257-55731	14	24
121450-42450	10	26
122710-51090	11	8
123501-79240	18	4
124060-01050	1	4
124064-55510	14	20
124066-59100	13	39
124101-49531	10	21
124195-77770	15	21
124465-44950	10	28
		29
	17	19
124550-51350	11	23
124732-77340	16	22
	18	31
124766-59050	13	33
	14	9
		12
126650-12680	5	7
128990-51330	11	22
129008-61301	12	67
129052-79270	18	18
129100-01580	3	1
	8	2
129100-51560	11	42
129100-51570	11	44
129107-44590	10	31
129150-25301	7	12
129150-59120	13	24
129150-59131	13	27
129155-51020	11	5
129155-51140	11	12
129155-51280	11	18
129155-51400	11	25
129155-51521	11	38
129155-51530	11	39
129155-51540	11	40
129155-51550	11	41

Parts No.	Fig. No.	Ref. No.
129155-51580	11	46
129155-51591	11	47
129155-51600	11	48
129155-52051	11	86
129155-61341	12	68
129155-61450	12	22
129155-61460	12	69
129155-61480	12	24
129155-61830	12	58
129156-61460	12	23
129209-61370	12	12
129209-61920	12	71
129209-61930	12	72
129209-61970	12	73
129210-59140	13	32
	14	8
129210-59230	14	11
129211-77920	18	38
129240-79300	18	12
129335-55700	14	16
129400-92400	17	26
129423-77200	18	1
129423-77710	18	16
129457-44760	10	19
129486-61540	12	49
129486-61650	12	53
129555-59511	14	13
129612-12650	5	6
129698-77110	15	2
129698-77120	15	3
129698-77130	15	4
129698-77140	15	5
129698-77150	15	6
129698-77161	15	7
129698-77180	15	9
129698-77190	15	10
129698-77250	15	14
129900-32040	1	27
	17	11
129901-11450	4	2
	17	7
129901-59560	13	37
	17	21
129972-77341	16	23
	18	32
158552-61900	12	70
158600-51170	11	14
158600-51410	11	26
158600-51420	11	28
158600-51442	11	29

Parts No.	Fig. No.	Ref. No.
158600-51570	11	45
158600-51790	11	71
171056-49120	10	25
171081-55910	14	28
174307-51700	12	31
22190-060003	12	123
22190-100002	12	74
22190-120002	12	75
	13	43
	14	14
	17	22
22190-160002	3	9
	11	72
	17	23
22217-120000	11	73
22242-000100	4	31
22252-000200	8	22
22272-000030	12	59
22351-030010	8	14
22351-050010	11	74
22351-060012	1	28
22372-040000	12	76
22512-040120	8	5
22857-500100	4	47
		48
23000-054000	5	11
23414-080000	10	13
	17	24
23414-120016	12	77
23418-060000	14	29
23876-005000	1	10
	4	11
23887-100002	12	78
24101-060034	11	75
24101-063034	11	76
24311-000180	2	7
	4	50
	17	25
24311-240100	14	30
24316-000150	11	77
25132-003400	10	17
26014-060122	10	33
26022-050122	11	78
26022-060162	11	79
26106-050102	11	80
26106-060102	9	10
		13
	12	79
26106-060122	7	8
26106-060142	9	2

Parts No. Index

Parts No.	Fig. No.	Ref. No.
26106-060142	12	80
26106-060202	4	51
	12	81
26106-060402	1	29
26106-060452	10	20
	12	82
26106-060802	4	52
26106-080122	10	14
26106-080162	14	4
26106-080202	16	24
	18	33
26106-080252	10	23
	14	5
26106-080352	2	4
26106-080452	2	5
	4	32
	10	15
26106-080652	10	24
26106-100252	15	22
26106-100402	16	20
	18	29
26206-100252	3	5
26306-080002	6	6
26366-080002	12	60
26450-080252	1	35
26476-060202	4	49
26577-060122	10	10
26716-120002	11	81
26756-060002	12	61
		83
		124
26856-060002	4	30
27241-220000	10	11
27241-300000	1	11
27241-350000	4	12
27241-450000	1	12
27260-120000	12	62
719025-53100	13	1
719128-51310	11	1
977770-1207F	17	27
X0280210331	15	20 A
X0280626010	15	20 K
X0280996180	15	20 C
X0281007680	15	20 B
X0282005871	15	20 D
X0283006960	15	20 E
X0284105040	15	20 F
X0284525010	15	20 H
X0285007030	15	20 J
X0285105190	15	20 M

Parts No.	Fig. No.	Ref. No.
X0285205030	15	20 N
X0286105010	15	20 P
X0286305010	15	20 R
X0286355010	15	20 S
X0287405140	15	20 T
X1280330020	15	20 U
X1289510130	15	20 V
X2534000090	15	20 W
X4284001590	15	20 X
X9055715000	15	20 Z
X9490065670	15	21 A
X9490138090	15	21 B
X9490138100	15	21 C
X9490138110	15	21 D
X9490423520	15	21 E
X9490560750	15	21 F
X9490561001	18	2
X9490562360	15	21 G
X9490721360	15	21 J
X9491034320	15	20 Q
X9491034330	15	20 G
X9491040990	15	20 L
X9491050100	15	20 Y

Parts No.	Fig. No.	Ref. No.

Parts No.	Fig. No.	Ref. No.